Current/Voltage interface circuit

Features

- **Current (2- or 3-wire) and voltage output interfaces**
- **Controllable current sources with internal driver stages**
- **Adjustable current limitation**
- **Voltage output short circuit, reverse polarity protection**
- **Adjustable voltage/current regulator**
- **Processor or sensor supply possible**
- **Small package: QFN18 (5mm x 4mm x 0.9mm)**

Operating area

- Temperature range: T_a = -40 – 105°C
- Voltage range: V_{CC} = 2.5 – 28V
- Current output: $I_{Io} \leq$ 20mA int., $\leq$ 2A ext.
- Regulator current: I_{VCR} = 0 – 25mA

Applications

- Sensors, voltage/current converter
- Controllable current/voltage sources
- 0 – 5/10V, 0/4 – 20mA-Interface
- Automation, Building, Medicine, ...

Description

The mip-T112 was developed for the standard 0/4 – 20mA-current- (2- or 3-wire) and voltage (protected) interfaces. The circuit is also suitable as LED driver (brightness control possible) or as controllable current and voltage source. The current can be delivered directly by the circuit, with an additional external npn transistor current up to 2A is allowed.Also the circuit contains an adjustable voltage/current regulator, which can supply and protect the remaining components (sensor, processor, …).

Pinout

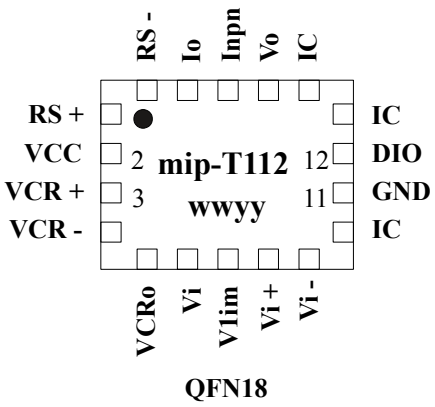

QFN18

Pin	Designation
VCC	Supply voltage
GND	Ground
VCR	Voltage / current regulator
VCR+/-	Regulator inputs
Vi	Current control input
Vlim/DIO	Current limitation / disable
RS+/-	Sense resistor
Io	Current output
Inpn	External npn transistor
Vi +/-	Voltage control inputs
Vo	Voltage output
IC	Internal connected

micro-part GmbH+Co.is.KG
Am Deutelsberg 6
D – 65375 Oestrich-Winkel

phone: 06723 / 601 695–0
fax: 06723 / 601 695–6
mail: info@micro-part.de

www.micro-part.de
September 2014
Version 1.0

Block diagram

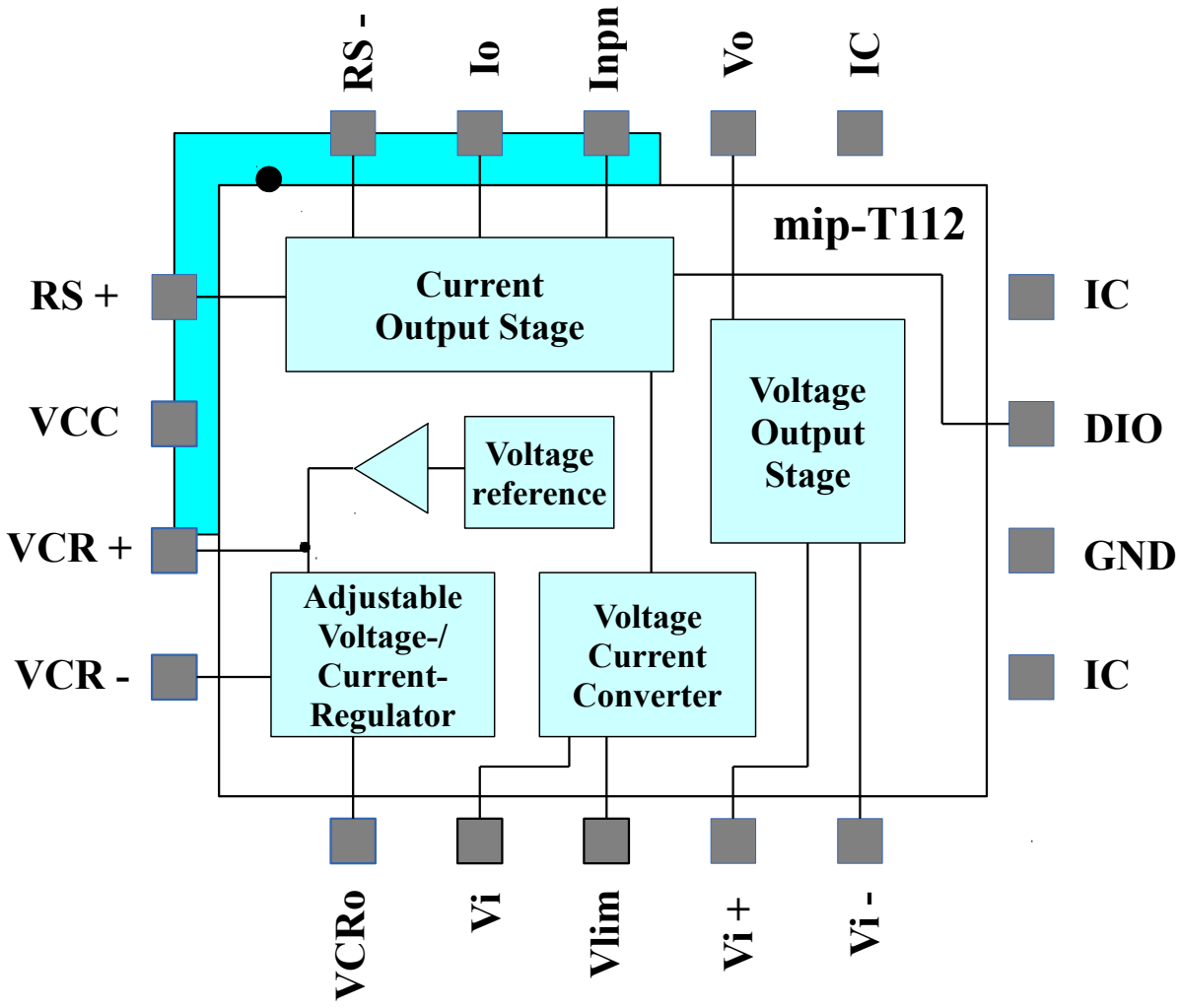

Typical application

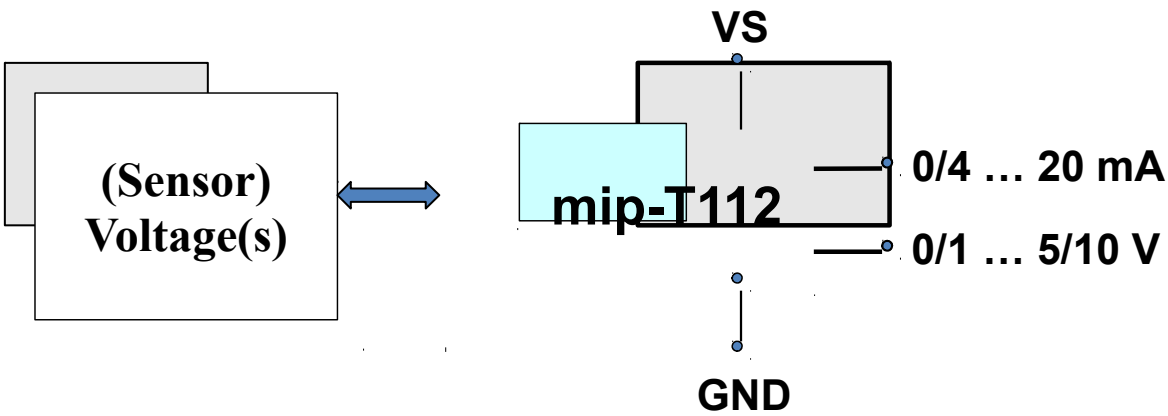

Package

FOQ18 (QFN18): 5.00mm x 4.00mm x 0.90mm

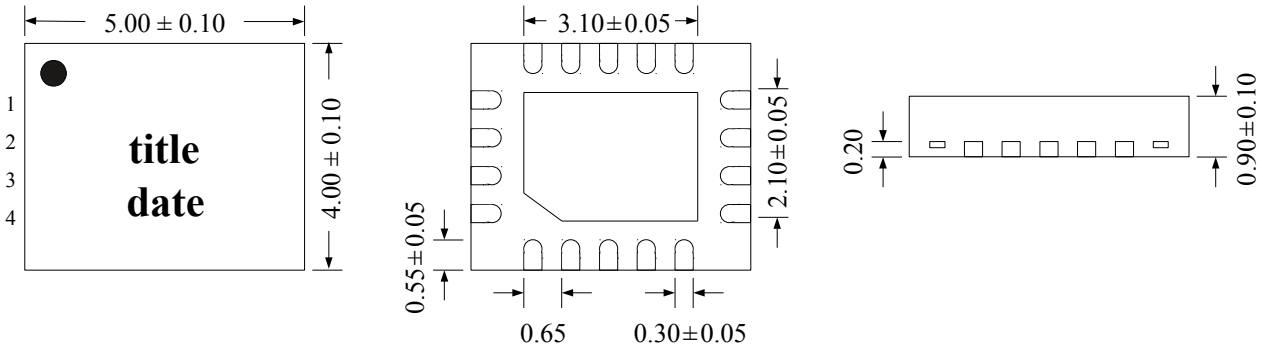

Boundary conditions

Parameter	Symbol	Description	Min.	Typ.	Max.	Unit
Breakdown Voltage	V_{BR}	external (schottky) diode	35			V
Forward Current Gain	β_F (T_N)	external npn-transistor	100			
Absolute Maximum Ratings						
Supply Voltage Range	V_{CC}		0		30	V
Operating Temperature Range	T_a	ambient temperature	–40		105	°C
Storage Temperature Range	T_s		–55		150	°C
Junction Temperature Range	T_j				150	°C
Power Dissipation	P	T_{amax} = 85°C (with pcb heat sink)			1.25	W
Lead Temperature	T_l	soldering 10s			300	°C

Electrical specifications

T_a = 25°C, V_{CC} = 10V (unless otherwise noted)

Parameter	Symbol	Conditions	Min.	Typ.	Max.	Unit
Supply Voltage Range	V_{CC}		2.5		28	V
Supply Current	I_{CC}	no external currents		0.4		mA
1) Adjustable Voltage- / Current-Regulator: $V_{VCR} = V_{BG} * (R_{R1} + R_{R2}) / R_{R2}$ or $I_{VCR} = V_{BG} / R_{R2}$						
Internal Bandgap Reference	V_{BG}	V_{CC} > 10V	1.21	1.24	1.27	V
Bandgap Reference Drift	dV_{BG}/dT	T_a = 0...+50°C		±25		ppm/°C
	dV_{BG}/dT	T_a = – 40...+105°C		±40		ppm/°C
Power Supply Rejection Ratio	PSSR (V_{BG})			80		dB
Output Voltage Drop	V_{DR}	$V_{CC} – V_{VCRo}$, $I_{VCR} \leq$ 1mA	1.5			V
	V_{DR}	$_{VCC - VVCRo}$, I_{VCR} = 25mA	3			V
Output Voltage Range	V_{VCR}		V_{BG}		$V_{CC} – V_{DR}$	V
Output Current	I_{VCR}	respect to power dissipation			25	mA
Load Capacitance	C_L		0	100		nF

Parameter	Symbol	Conditions	Min.	Typ.	Max.	Unit
2) Protected Voltage Output Stage						
Input Voltage Range	V_{IR}		0		V_{CC} – 1.5	V
Power Supply Rejection Ratio	PSRR		80			dB
Offset Voltage	V_{OS}			±0.8		mV
Offset Voltage Drift	dV_{OS}/dT			±2.8		µV/°C
Input Bias Current	I_B			10		nA
Output Voltage Range	V_{OR}	R_L = 10kΩ, $V_O \leq$ 10V	0.01		V_{CC} – 3.5	V3
	V_{OR}	R_L = 2kΩ, $V_O \leq$ 10V	0.005		V_{CC} – 5	V
Output Current Limitation	I_{LIM}	short circuit protection	5	7		mA
Load Resistance	R_L	$V_O \leq$ 10V	2			kΩ
Load Capacitance	C_L		0			nF
3) Current Output Stage: IO = VI_I / R_S						
Input Voltage Range	V_{IR}	V_{CC} < 8V	0		V_{CC} – 2.4	V
	V_{IR}	$V_{CC} \geq$ 8V	0		5	V
Offset Voltage	V_{OS}			±2		mV
Offset Voltage Drift	dV_{OS}/dT			±8		µV/°C
Input Bias Current	I_B			15		nA
Sense Resistor Voltage	V_{RS}			V_{Vi}		V
Sense Resistor Voltage Fullscale	V_{RS}(FS)				5	V
Output Current Range	IO	internal npn	0		22	mA
	IO	additional external power npn	0	0.2	2	A
Output Offset Current	I_{OS}			–20		µA
Stabilization Resistor	R_Z		R_S / 4	R_S / 3		Ω
Output Resistance	R_{IO}		1			MΩ
Load Resistance	R_L	V_{IOmax} / I_{IO}	0	500		Ω
Load Capacitance	C_L		0		50	nF

Functional description

The mip-T112 is designed for use in sensor systems for the construction of analog interfaces. In addition to the controllable current source the circuit contains a voltage interface and an adjustable, controllable voltage/current regulator to supply external components such as a sensor cell or a processor. The regulator delivers up to 25mA output current.

The circuit is applicable in the extended temperature range of -40 – 105°C and in the voltage range of 2.5 – 28V. It is available in a small QFN18 package. In addition to the current loop and voltage interface, the device is also particularly suitable for LED applications as well as controllable current and voltage sources.

The regulator as well as the current and voltage outputs can be adjusted by external resistors and controlled by external voltages. In addition to these resistors one (2-wire) or two (3-wire) reverse polarity protection diodes and a capacitor (for microprocessor supply the capacity is usually specified by the manufacturer) are needed, at higher current an additional npn transistor.

The required minimum supply voltage is defined by the regulator voltage, the maximum voltage on the current and voltage outputs, the minimum internal voltage drops of the mip-T112 and the required external components.

The maximum currents from the regulator and the analog interfaces depend on the power dissipation occurring in the circuit. Although the circuit contains an internal driver for the 20mA current loop interface, it might be useful to connect an external npn transistor to minimize power dissipation. Higher currents up to 2A are possible with external power components.

1) Adjustable and controllable voltage/current regulator (Pins: VCR+, VCR-, VCRo)

The regulator is set by external resistors (R_1, R_2). It is infinitely adjustable from the internal reference voltage (bandgap V_{BG}) up to the supply voltage V_{CC} minus the internal voltage drop V_{DR}. When a sensor is connected in place of R_1, its current is controlled. An external power source can be connected to VCR+. The regulator then operates on this voltage, and thus can be controlled, in formula (1) and (2) V_{BG} is replaced by the reference voltage.

Voltage regulator: $$VCR = V_{BG} * \left(1 + \frac{R_{R1}}{R_{R2}}\right) \quad (1)$$

Current regulator: $$I_{VCRo} = \frac{V_{BG}}{R_{R2}} \quad (2)$$

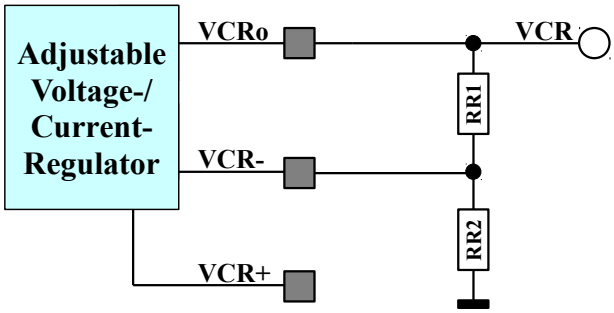

2) Protected voltage interface (Pins: Vi+, Vi-, Vo)

The voltage output is due to his short-circuit and reverse polarity protection and because of its driving performance is suited as a 0 - 10 V interface. Because of the variable gain other output voltages can also be adjusted.

In normal operation, as a non-inverting amplifier, the gain of the resistors R_{V1} and R_{V2} is set, thus allowing the adjustment of the output voltage over a wide range.

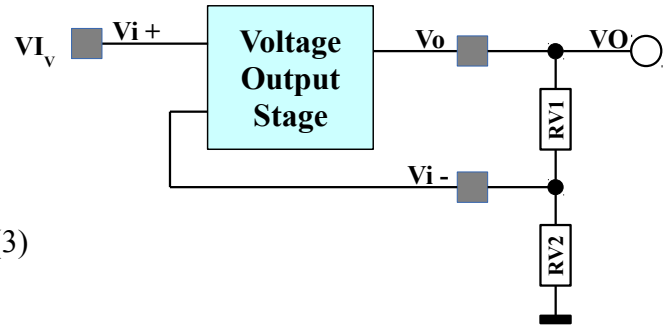

Output voltage calculation:

$$VO = VI_V * \left(1 + \frac{R_{V1}}{R_{V2}}\right) \quad (3)$$

3) Current interface (Pins: Vi, Vlim, RS+, RS-, Io, VCC, GND)

The current output is a voltage controlled current source and designed for the current loop interface (0/4 – 20mA, 2- or 3-wire). The current can be delivered directly by the circuit, with an additional external npn transistor current up to 2A is allowed. The circuit is also particularly suitable for LED applications (brightness control possible) as well as a controllable current source.

The voltage across the sense resistor R_S is controlled by the input voltage Vi, thereby the output current is produced. The output current can be limited about Vlim. Both inputs are high impedance. The input voltages can therefore be adjusted with resistive voltage dividers.

Output current: $IO = \frac{Vi}{R_S}$ (4)

Current limitation: $IO \leq \frac{Vlim}{R_S}$ (5)

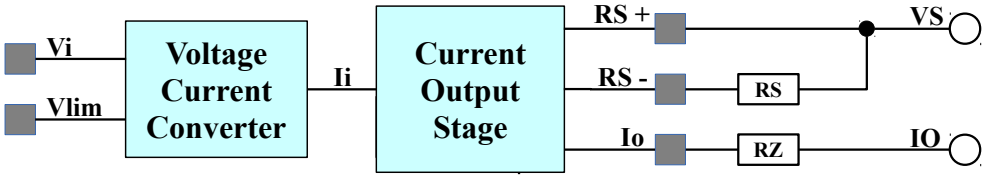

In 3-wire operation VCC is connected to RS+, in 2-wire operation with RS- and additionally IO with GND.

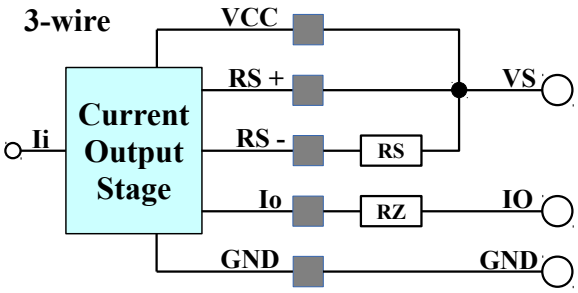

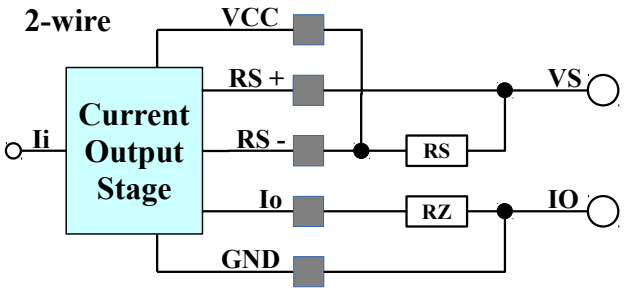

The current output Io directly delivers the 20mA current. With an additional external npn transistor (pay attention to the power dissipation) larger currents are possible.

In 2-wire operation reverse polarity protection is achieved by a diode at VS, in 3-wire operation an additional diode at IO is required.

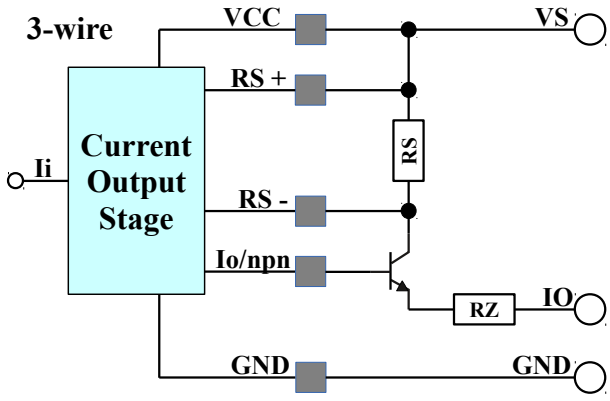

The information provided herein is believed to be reliable; however, micro-part assumes no responsibility for inaccuracies or omissions. micro-part assumes no responsibility for the use of this information, and all use of such information shall be entirely at the user's own risk. Prices and specifications are subject to change without notice. No patent rights or licences to any of the circuits described herein are implied or granted to any third party. micro-part does not authorise or warrant any micro-part product use in life support devices and/or systems.